EE350 - Spring 2025_26

Laboratory #1: CASCODE STAGES AND CURRENT MIRRORS

1. Objective:

In this experiment, you will construct a cascode stage amplifier and a current mirror. You will measure the amplifier gain, input, and output impedances of the cascode stage amplifier. You will also verify the operation of the current mirror.

Equipment and circuit components: Signal Generator, Power supply with variable voltage, Multimeter, Breadboard, BJT transistors (2N4401), NMOS transistors (2N7000), Potentiometers, Resistors (of specified values in the manual).

2. Prelab:

2.1. Design a cascode amplifier with a gain greater than 200 at 10kHz.

- Consider the following circuit topology.

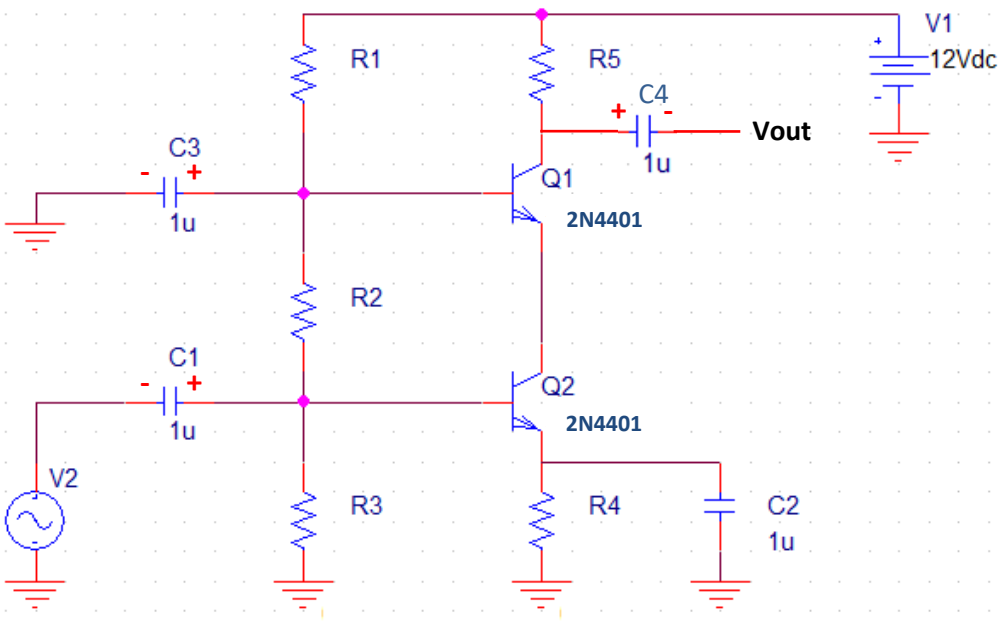

Cir. 2.1

- Choose R4, a small resistor around 300Ω.
- Set the collector currents to approximately 1mA.
- Choose R1, R2, and R3 such that:
  - one-tenth of the collector current flows through them neglecting base currents.
  - V_{BE2} is approximately 0.7V.
  - Q1 is in the active region.
- Choose R5 to get a gain greater than 200 and ensure Q1 is in the active region.

2.2. Verify your design that it delivers a gain greater than 200 using LTspice. Also, measure input and output impedances using LTspice. Use LTspice to fine-tune the resistor values to obtain a gain greater than 200, if necessary.

2.3. Design (Choose R1) the following current mirror to deliver 1 mA current to R_{LOAD}. For the NMOS transistor, use the following parameters: V_{TH}=2.1V, $\mu_N C_{OX}(W/L)$=180 mA/V^2.

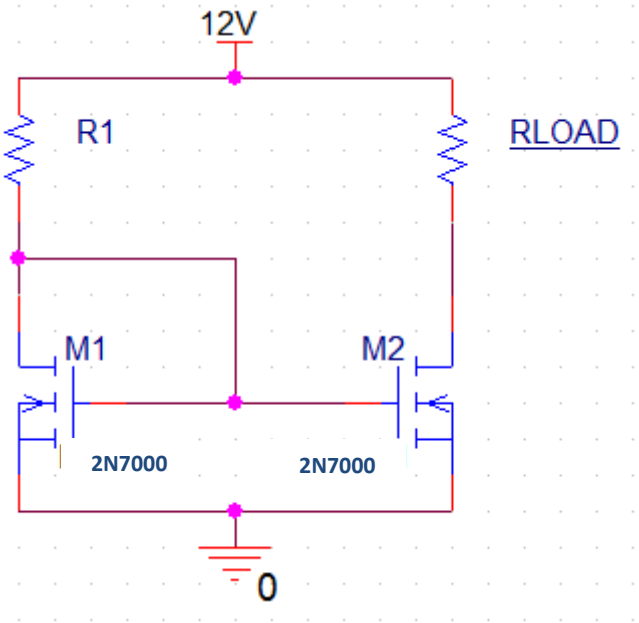

Cir 2.3

3. Lab tasks:

In the lab, you will be provided with 2N4401 and 2N700 transistors. The pin diagrams are shown below:

Task 1. Cascode amplifier

- Construct the circuit shown in Cir 2.1 with two 2N4401 transistors. Use resistor values given to you by the TA. **Pay attention to capacitors' polarity while constructing the circuit. (Take a photo of your circuit)**
- Set the function generator output to 2mV peak sine wave at 10kHz.
- Observe the output waveform (voltage at the collector of Q1) on a scope screen. Measure the output amplitude and decide on the gain. **(Take a photo of your measurement)**

$$Amplifier\ Gain = \frac{V_{opp}}{V_{ipp}}$$

Vopp: Output peak-to-peak voltage.
Vipp: Input peak-to-peak voltage.

Task 2. (Input impedance)

- Set the signal generator to 10kHz, 2mV peak as in step 1.
- Add a series potentiometer between the signal generator and the amplifier. Set the value of the potentiometer to zero initially. While observing the output waveform, start increasing the value of the potentiometer. When the amplitude drops by half, remove the potentiometer from the circuit and measure its value. This is the input impedance. **(Take photos of your circuit and measurements)**

Task 3. (Output impedance)

- Reconnect the signal generator to the circuit without the potentiometer at the input side.
- Set the potentiometer to its maximum value (i.e. 100kΩ). Connect it between the output node and the ground.
- Reduce the value of the potentiometer until the output voltage amplitude drops by half. Remove the potentiometer at this point and measure its value. This is the value of the output impedance. **(Take photos of your circuit and measurements)**

Task 4. Current mirror

- Construct the circuit that you designed in Cir 2.3 with the calculated R1 value to deliver 1mA to the load resistor. You may need to tweak the value of R1 to get exactly 1mA. **(Take a photo of your circuit)**
- Try the following load resistors and measure the current flowing through RLOAD. Comment on the results. **(Take photos of your measurements)**

RLOAD (ohms)	**I (RLOAD) (mA)**
10	
100	
1000	
10000	
20000	
30000	